Metering Work

Meaning, Value and Governance

Mette Kragh-Furbo and Gordon Walker
DEMAND Centre, Lancaster University

3rd Energy & Society Conference
Leipzig September 11-14, 2016

kWh
240V
40A MAX
50c/s
S 200 16
WATTHOUR METER
250 revs/kWh
1PH 2W
FLOTON

Visualizer: easy to use analytics for everyone.

The work of metering

- **Turning electricity flow into data**

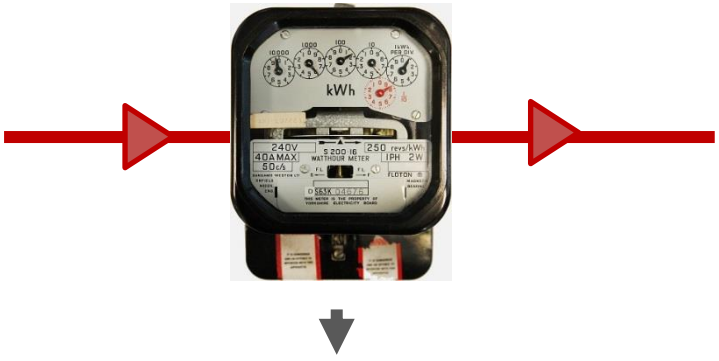

So much electricity has flowed through that wire

The work of metering

- Turning electricity flow into data
- **Providing a 'trace' of a 'slice' of the enactment of technology-practice configurations, measured in Kwh**

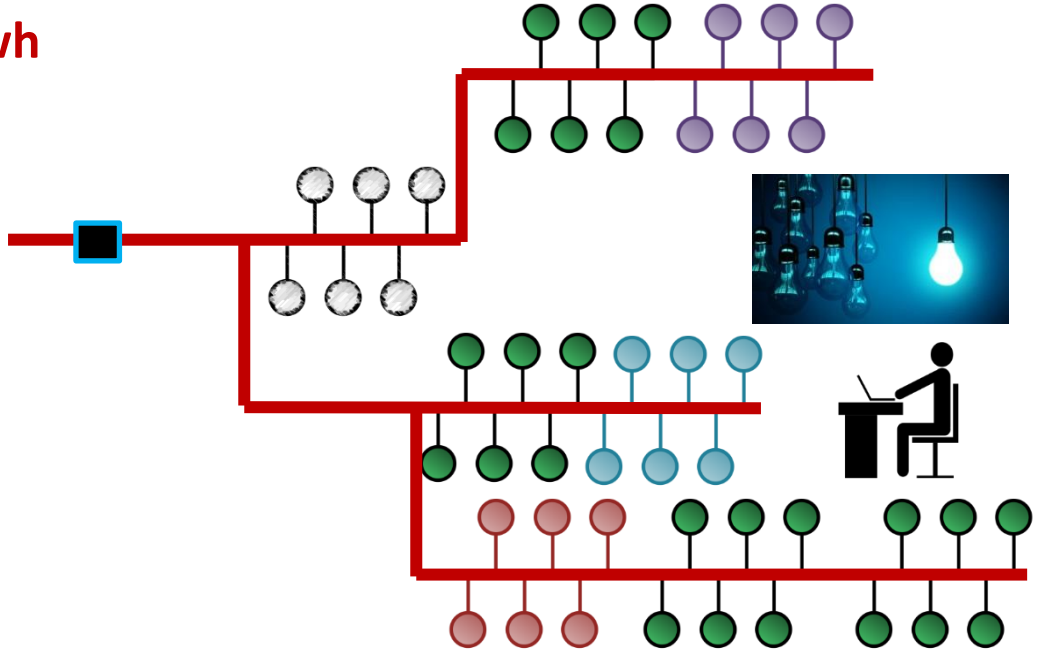

The work of metering

- Turning electricity flow into data

- Providing a ‘trace’ of a ‘slice’ of the enactment of technology-practice configurations, measured in Kwh
  - **Marking a boundary (slice = space)**

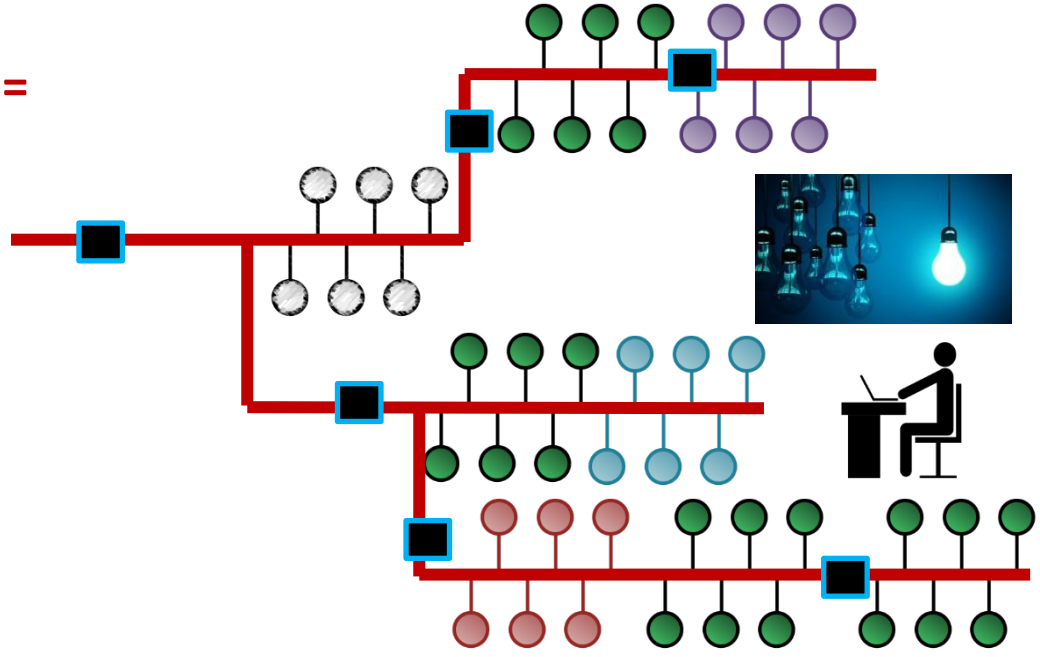

The work of metering

- Turning electricity flow into data

- Providing a ‘trace’ of a ‘slice’ of the enactment of technology-practice configurations, measured in Kwh
  - Marking a boundary (slice = space)
  - **Dividing into temporal units (slice = time)**

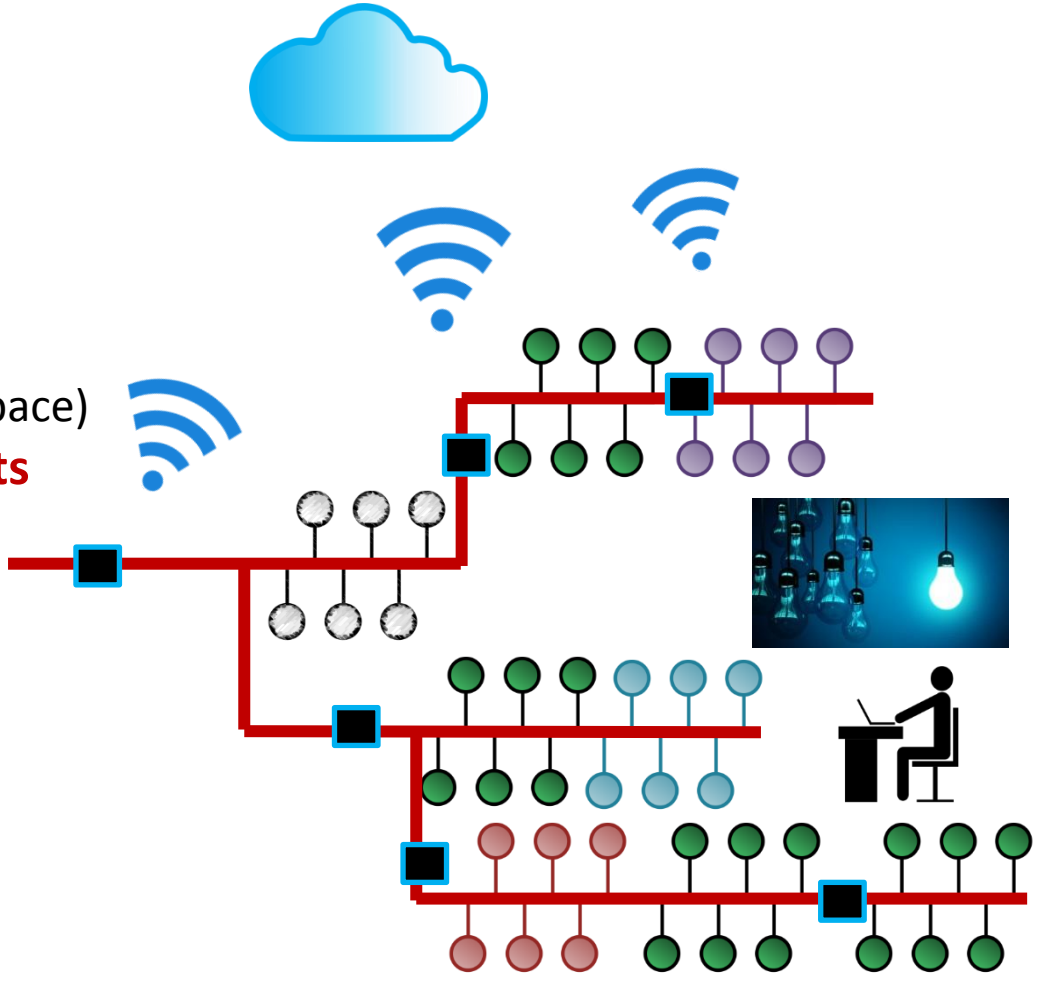

The work of metering

- Turning electricity flow into data

- Providing a ‘trace’ of a ‘slice’ of the enactment of technology-practice configurations, measured in Kwh
  - Marking a boundary (slice = space)
  - **Dividing into temporal units (slice = time)**

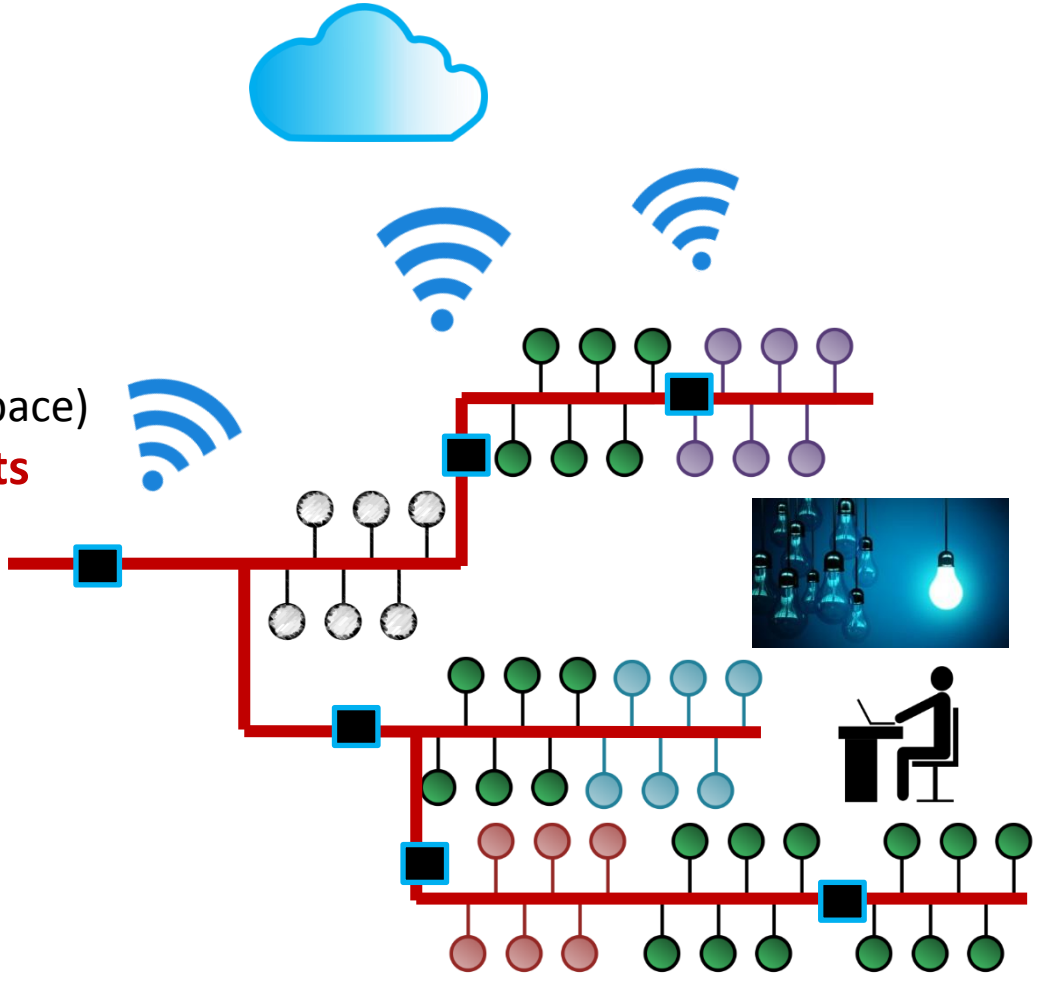

The work of metering

- Turning electricity flow into data
- Providing a ‘trace’ of a ‘slice’ of the enactment of technology-practice configurations, measured in Kwh
  - Marking a boundary (slice = space)
  - Dividing into temporal units (slice = time)
- **Generating evidence that has value, potentially of different forms**

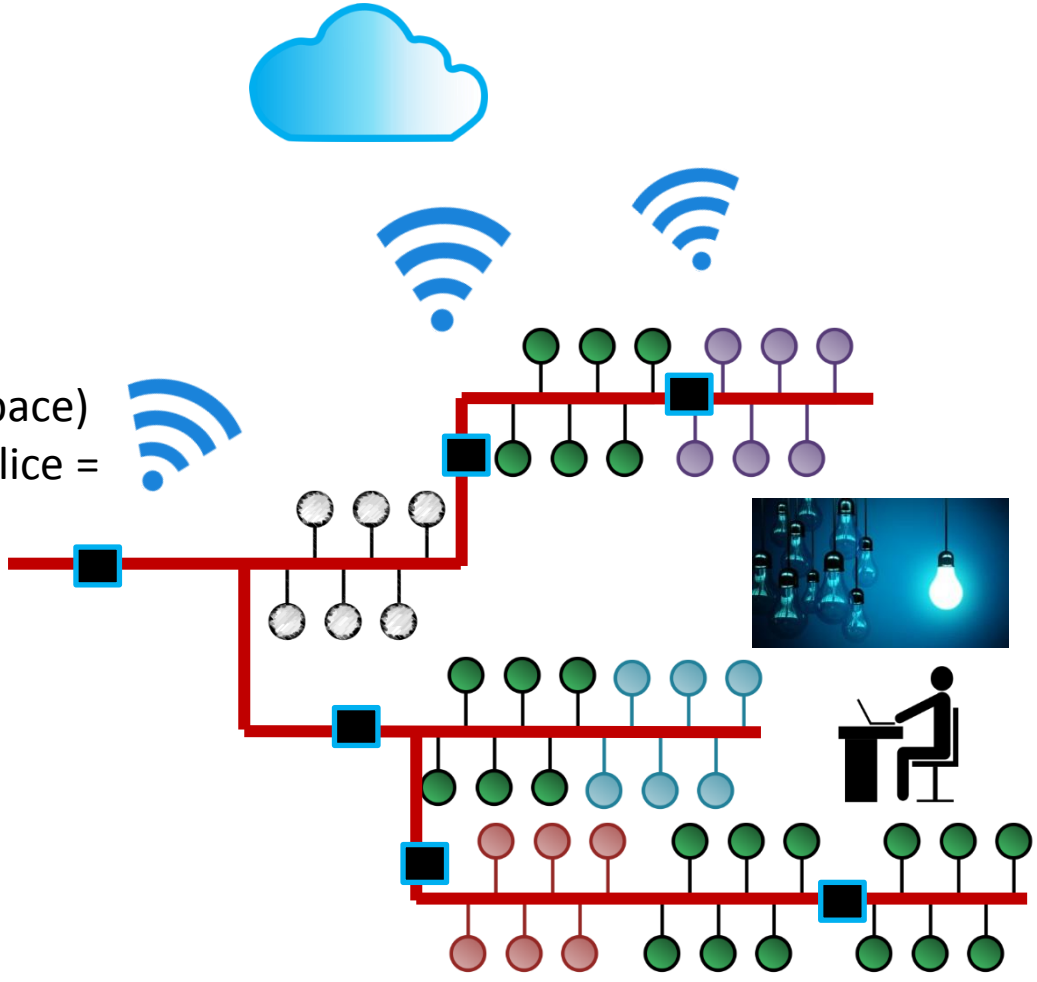

The work of metering

- Turning electricity flow into data
- Providing a ‘trace’ of a ‘slice’ of the enactment of technology-practice configurations, measured in Kwh
  - Marking a boundary (slice = space)
  - Dividing into temporal units (slice = time)
- Generating evidence that has value, potentially of different forms
- **Monetising (and re-monetising) the flow of electricity**

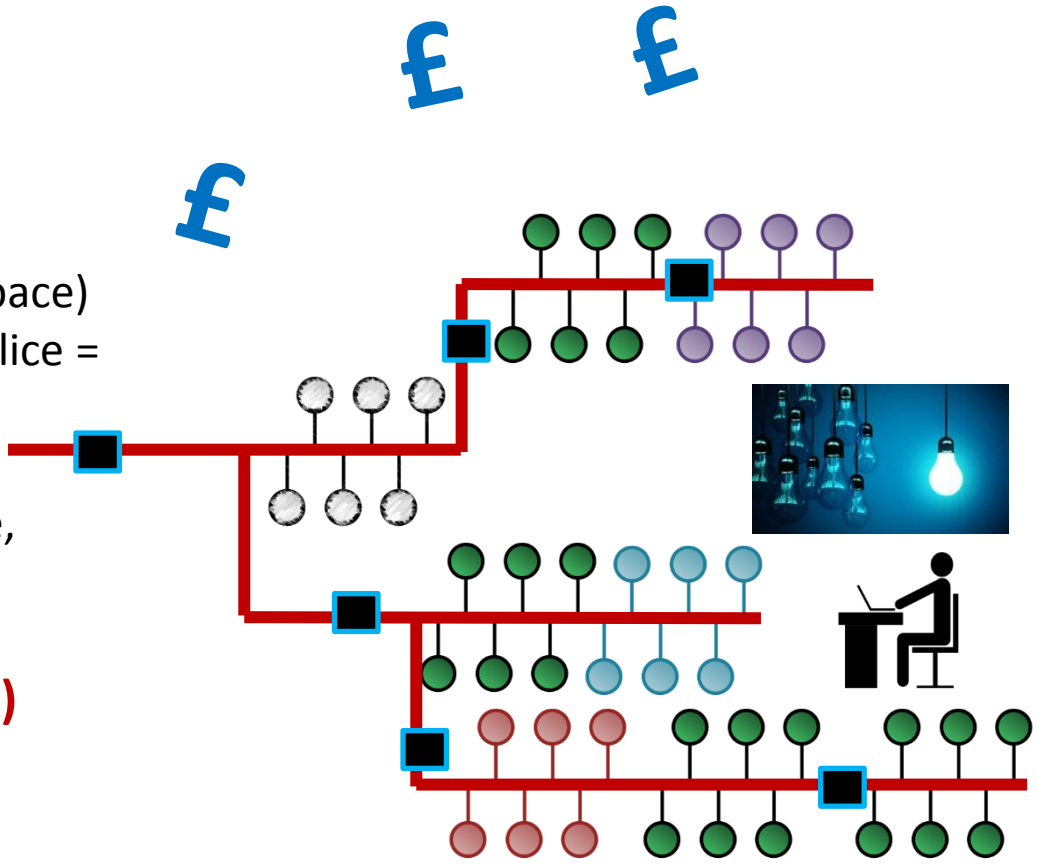

The work of metering

- Turning electricity flow into data
- Providing a ‘trace’ of a ‘slice’ of the enactment of technology-practice configurations, measured in Kwh
  - Marking a boundary (slice = space)
  - Dividing into temporal units (slice = time)
- Generating evidence that has value, potentially of different forms
- Monetising (and re-monetising) the flow of electricity
- **(sometimes) Regulating the flow of electricity**

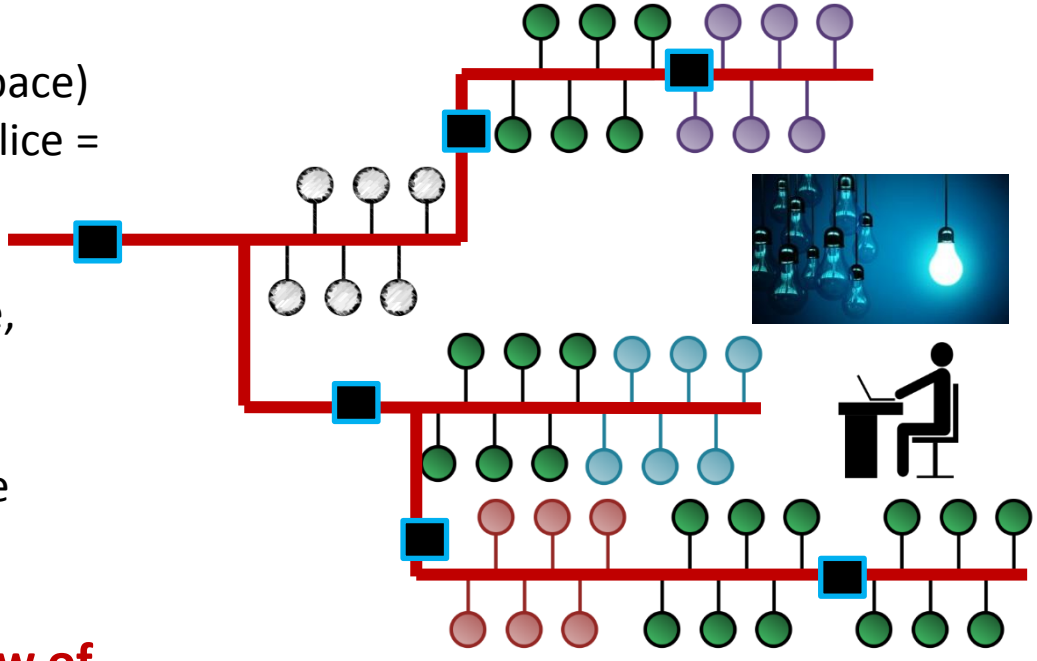

The work of metering

- Turning electricity flow into data
- Providing a ‘trace’ of a ‘slice’ of the enactment of technology-practice configurations, measured in Kwh
  - Marking a boundary (slice = space)
  - Dividing into temporal units (slice = time)
- Generating evidence that has value, potentially of different forms
- Monetising (and re-monetising) the flow of electricity
- **(sometimes) Regulating the flow of electricity**

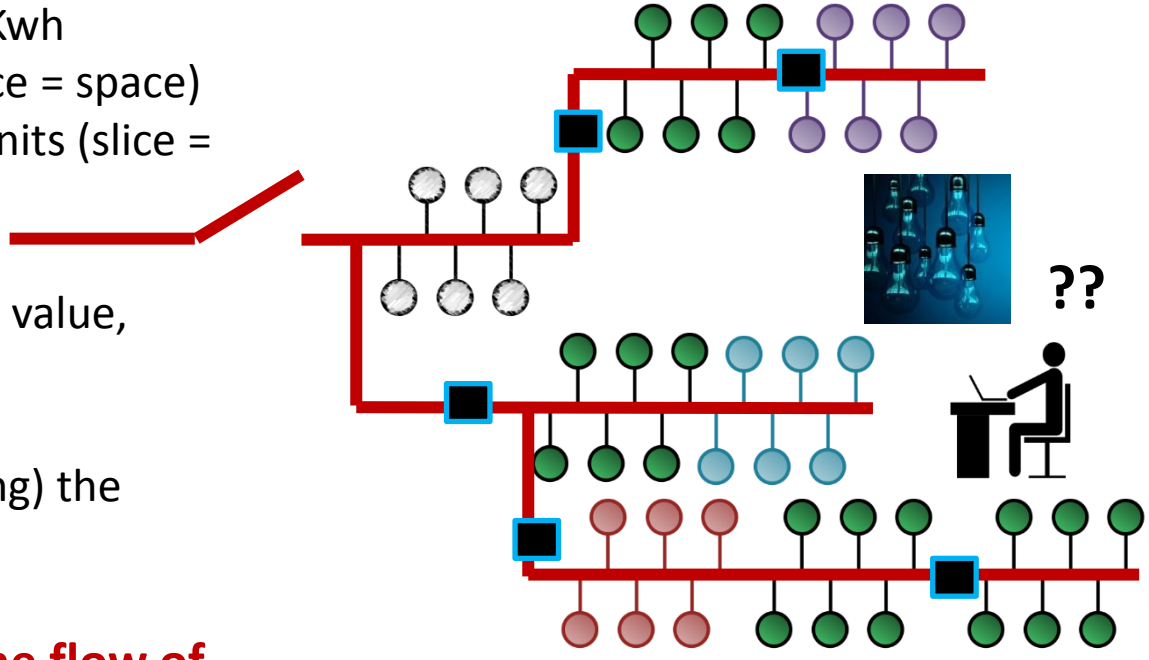

We are seeing an explosion of metering activity, and energy-data making, within increasingly smaller ‘slices’.

These capacities of metering are being enrolled into governance processes in four different domains/ applications:

1. **domestic (and SME) smart-metering roll out – fiscal/utility/main meters**

2. **sub-metering of tenants by landlords, replacing ‘within-rent’ standard service changes**

3. **sub-metering within businesses and large public organisations**

4. **sub-metering associated with demand-response contracts**

We are seeing an explosion of metering activity, and energy-data making, within increasingly smaller ‘slices’.

These capacities of metering are being enrolled into governance processes in four different domains/ applications:

1. **domestic (and SME) smart-metering roll out – fiscal/utility/main meters**

2. **sub-metering of tenants by landlords, replacing ‘within-rent’ standard service changes**

3. **sub-metering within businesses and large public organisations**

4. **sub-metering associated with demand-response contracts**

What is the expected value from doing more metering work in businesses and large organisations - having more sub-meters, more densely packed, and pulsing data on electricity flow more frequently into data infrastructures?

Why is this data being seen as ‘evidence that has value’; and how is electricity flow being re-monetised through its mobilisation as data?

Researching the Governance of Energy Demand in Local 'Smarter' Grids

Research Design

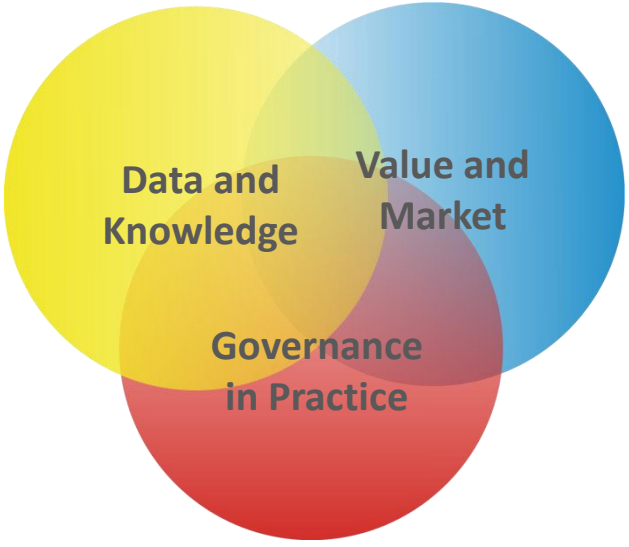

- 10 months into the research
- Discourse analysis of 23 automated monitoring and targeting (aM&T) companies in the UK
- Interviews with company directors and reps (ongoing)
- Interview with market actors incl. aggregators (later on)
- Case studies with organisations and/or businesses (later on)

Discourse Analysis in Brief

- Sub-metering and automated monitoring and targeting (aM&T) as critical and central to problems and challenges facing energy managers
- Solutions = more and more data to know where and when energy is used

Two Overarching Narratives

- Metering creates visibility
- Metering enables management

Metering Creates Visibility

"Ignite delivers a full range of management services that gives businesses a clear picture of their energy usage and what they can do to cut consumption in the future" (Ignite Energy)

"We'd love to show you how our wireless sensor technology coupled with our energy analytics platform can provide unmatched visibility into your facility operation" (Panoramic Power)

Metering Creates Visibility

"I now have the truth… It's fantastic. […] I want 100% data. I don't want to make excuses. […] I want a smart meter on a light bulb".

(Energy manager, UK city council,
from trade event in Coventry Feb. 2016)

Metering Enables Management

- “You can’t management what you don’t measure”.

- Energy management method

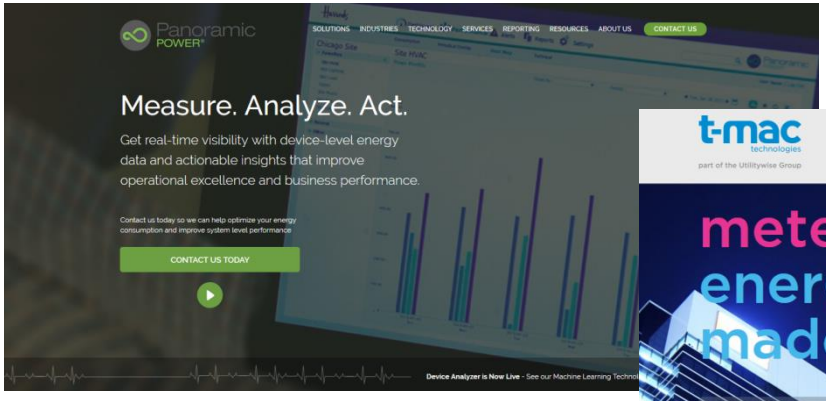

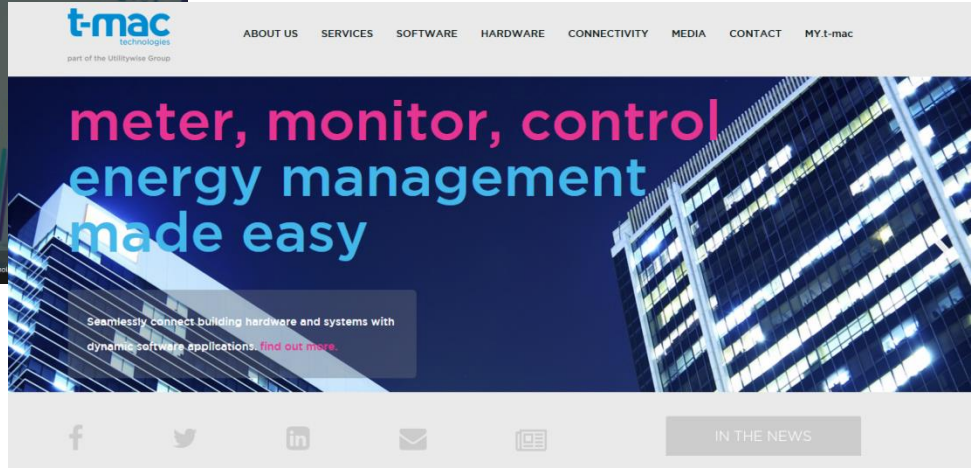

Sub-Metering at Work

Two specific capabilities are enabled

- Pattern-making over time
- Boundary-making in space

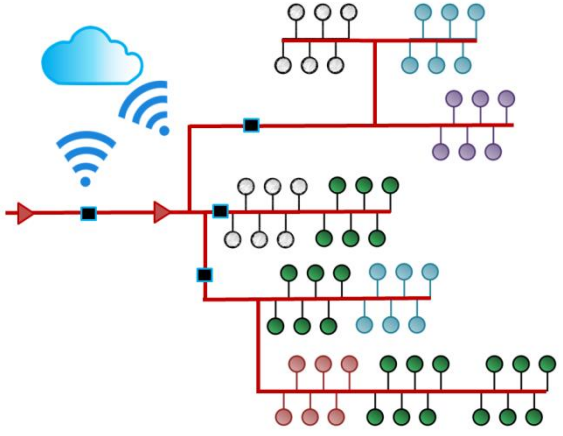

Pattern-Making over Time

Patterns of ‘normal’ v ‘abnormal’ flow; historic referent v ongoing
→ *targeting* of management actions

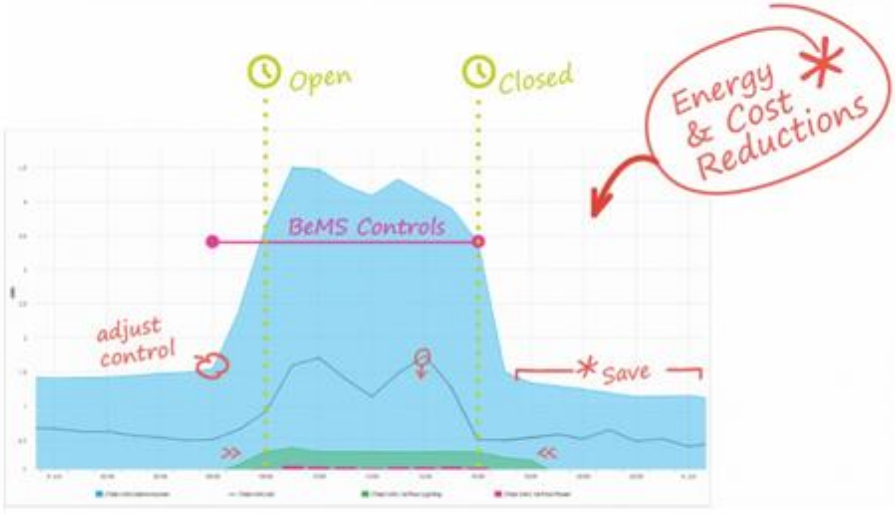

t-mac technologies
From www.t-mac.co.uk

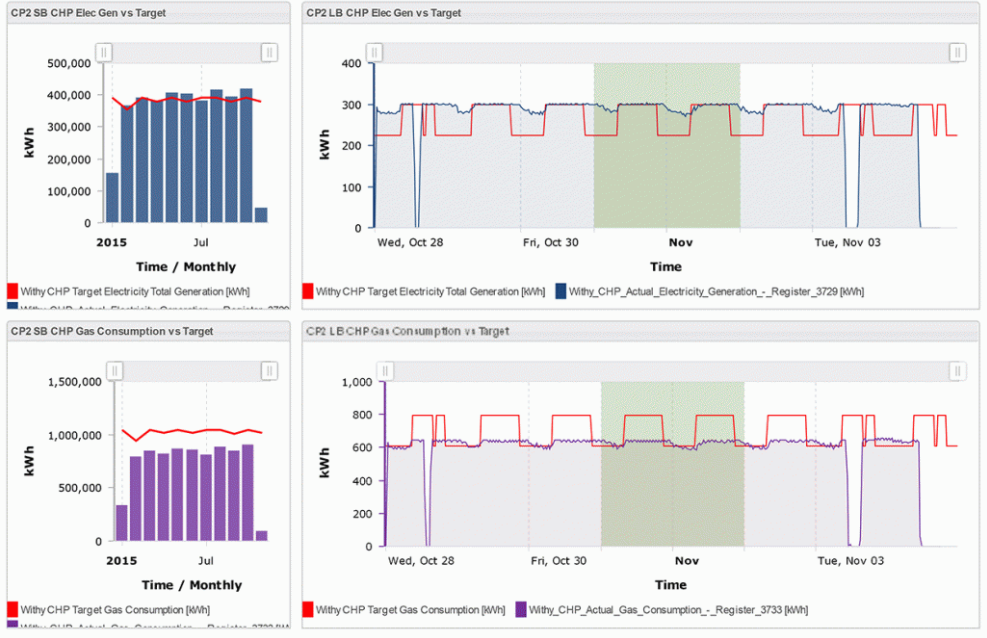

BMSi (Building Management Solutions Integrations)
From www.bmsi.co.uk

Pattern-Making over Time

- Problematic, unruly electricity flow is that which doesn't properly fit into normal, expected temporal patterns
- Not meter data that is 'actionable', but *comparisons* between temporal patterns.
- 'Alerts' or 'exception reports' create 'targets' that drive decisions to intervene, e.g. investigate problems, or enact repair and maintenance of technologies (and their users ..).
- Sub-metering promises a new kind of 'temporal visibility', and subsequently a form of 'real-time' energy management

Boundary-Making in Space

- The capability to measure and know flows through particular parts of electricity networks; to subdivide

- Electricity flows divided into technological categories, such as lighting and heating, or organisational units such as product lines, building floors, business functions or profit centres

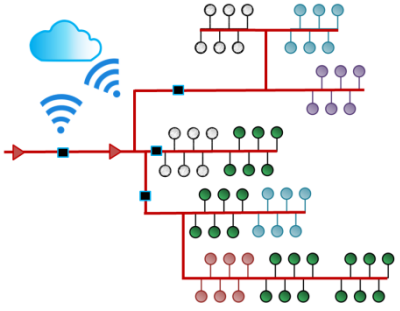

"*This is your dashboard. It tells you what the business is doing today as a whole, and then you can drill down. So you can drill down through sites, …. however you choose to structure it. ….. **it allows us to do all sorts of things. So, for example, to create a cost centre for catering**, and I can put these meters into that cost centre, or a proportion of that meter into a cost centre, **and that allows me to look at it in real time, how much I've spend on catering today**".* (Interview with CEO of energy management company)

Boundary-Making in Space

- An effective ‘re-mapping ‘of organisational, technology and/or building space as a field of energy waste and savings targets

- Sub-metering with its ‘distributed visibility’ promises and works to ‘pinpoint’ where energy (and therefore financial) ‘waste’ occurs

Sub-Metering at Work

- Patterns and maps as guides as to “what is worth looking at, how it looks, and, perhaps most important of all, how it should be looked at” (Daston and Galison 2007, p. 23)

- Electricity flow when turned into data starts to look and be treated like many other objects of management practice

Meter Data's Evidential Value

The bounded and temporal units of energy flows become bounded units for:

- Accounting and modelling
- Verification and compliance
- Reporting

} Valuation practices

- Data's evidential value depends on its ability to travel, in which:
- *"procedures involved in packaging data for travel involve various stages of manipulation, which may happen at different times and may well change the format, medium, and shape of data"* (Sabina Leonelli 2015, p. 816)

Concluding Reflections

Questions to be followed ..

- Who does this 'granular vision' work for?
- What is it attempting to make visible?
- What are the consequences for energy managers and employees?
- How does it relate to how the governance of energy use is becoming enrolled into the working of energy markets?

Concluding Reflections

On the work of sub-metering and this world of data rich 'informational governance' (Mol 2006) of energy:

- World and work of sub-metering characterised by continuity and change
- A new kind of energy metrics with a promise of knowing more precisely how energy is used – getting closer to moments and sites of electricity-using activities – that seemingly enables new ways of giving responsibility and accountability
- 'Granular vision' as a governance logic, given legitimacy through accounting practices that make electricity flow and its detailed evaluation matter. At the same time, meter data also an 'asset' and part of processes of re-monetizing the flow of electricity

Dr Mette Kragh-Furbo and Prof Gordon Walker

@mettekraghfurbo @profgwp

DEMAND Centre, Lancaster University

3rd Energy & Society Conference
Leipzig September 11-14, 2016